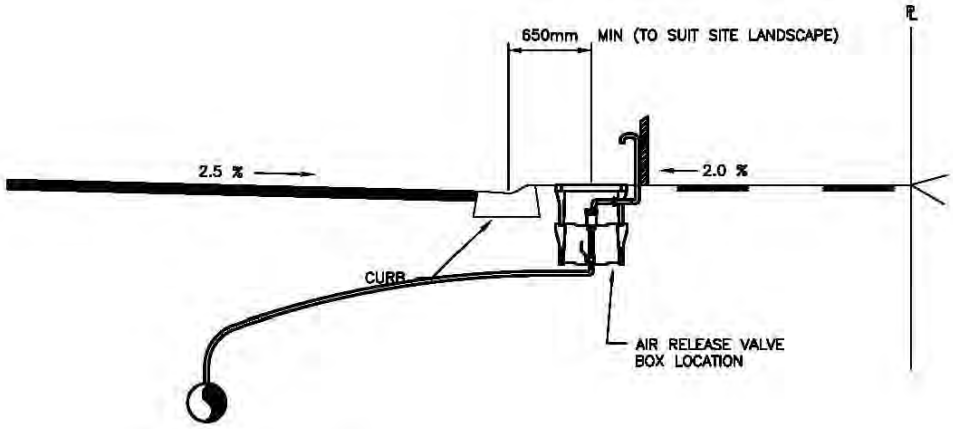

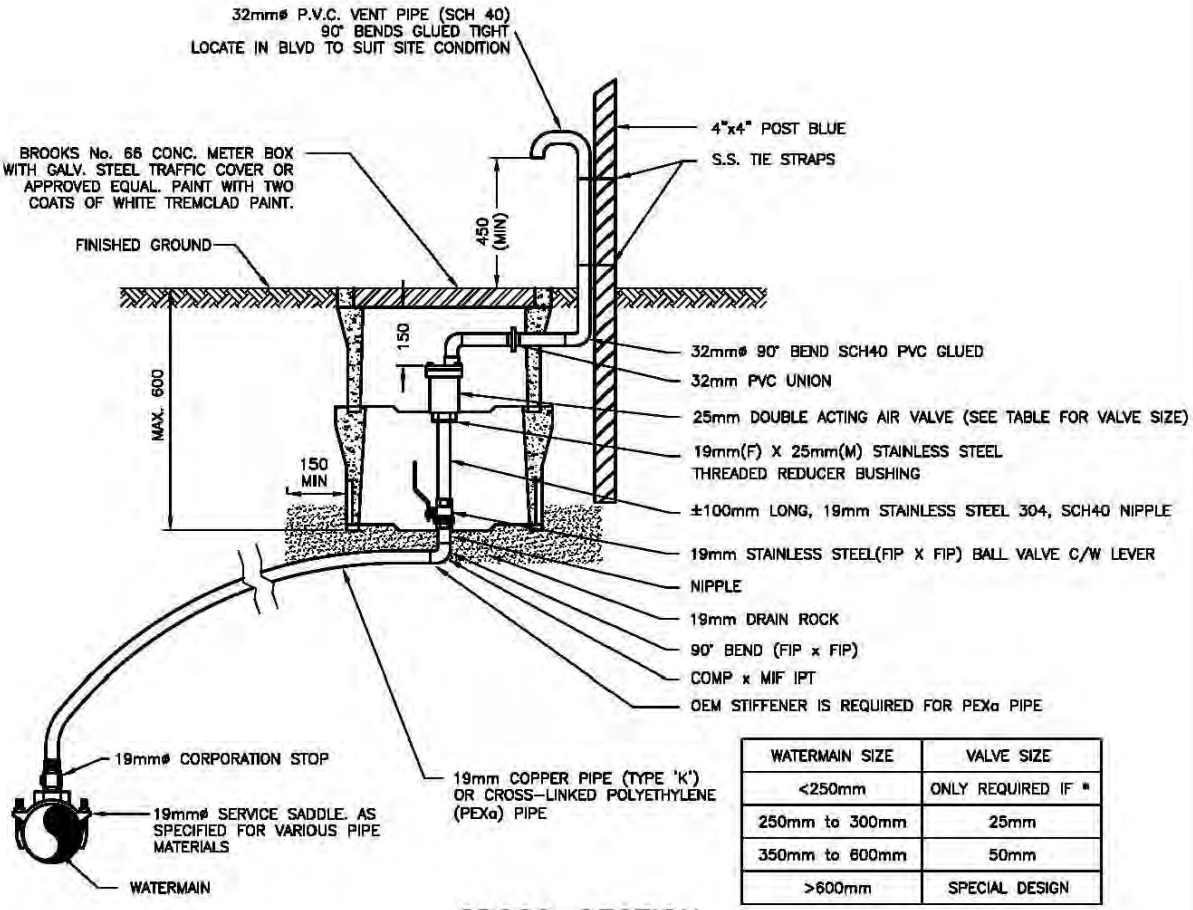

WATERMAIN SIZE	VALVE SIZE
<250mm	ONLY REQUIRED IF *
250mm to 300mm	25mm
350mm to 600mm	50mm
>600mm	SPECIAL DESIGN

CROSS-SECTION

*
1. THE DIFFERENCE IN ELEVATION BETWEEN THE SUMMIT AND VALLEY IS GREATER THAN 600mm OR

2. THERE ARE NO ACTIVE SERVICE CONNECTIONS SUITABLY LOCATED TO DISSIPATE ENTRAPPED AIR

NOTE:
ALL DIMENSIONS SHOWN IN mm
UNLESS OTHERWISE NOTED.

DATE	REVISION	No.	BY
2014-02	REVISIONS	3	DN
2012-01	GENERAL REVISIONS	2	RWG
01/08/07	MODEL & VENT PIPE	1	M.M.

REVISIONS

THE CORPORATION OF DELTA
ENGINEERING DEPARTMENT

AIR RELEASE VALVE INSTALLATION

JHL.	DN.	DWG. No.
CHKD. HCF	APVRD.	L 4.7
SCALE	N.T.S.	
DATE	2014-03-13	RVSN. 3